GEARWRENCH®

User Manual | Manuel de l'utilisateur | Manual del usuario

Fig. A

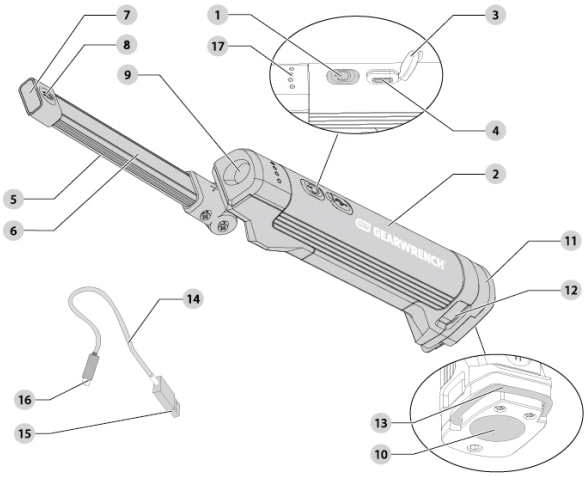

Components

1. Multifunction button
2. Housing
3. USB charging port cover
4. USB charging port
5. Articulating head
6. Articulating head LED
7. Articulating head spotlight LED
8. Articulating head magnet
9. Spotlight LED
10. Base magnet
11. Clamp
12. Clamp indents
13. Hang hook
14. USB cable
15. USB plug
16. Tool-end USB plug
17. Charging LEDs

Fig. B

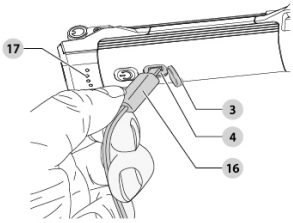

Fig. C

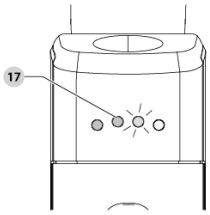

Fig. D

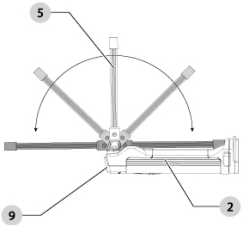

Fig. E

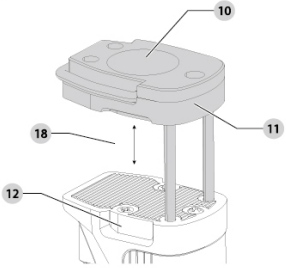

Fig. F

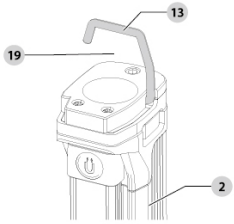

Additional Safety Rules for Handheld Lights

- *Do not submerge handheld light in any liquid.*
- *Do not wash light or battery with water or allow water to get inside light or battery.*
- *Do not operate without lens cover assembly attached.*

BATTERIES

The product is not fully charged out of the carton. Before using the product, read the safety instructions below and then follow the charging procedures outlined.

NOTE: If the product is unused for approximately 90 days, fully charge the battery to help prolong the life of the battery.

Important Safety Instructions for All Integral Battery Charging

WARNING: Read all safety warnings, instructions, and cautionary markings for the battery, charging cable and product. Failure to follow the warnings and instructions may result in electric shock, fire and/or serious injury.

WARNING: Only charge product using a UL- or CSA-Listed Class 2 USB power adapter that is compliant with applicable country regulations and international/regional safety standards. Using adapters that do not meet applicable safety standards could result in injury.

- ***Only use the charging cable supplied by the manufacturer for charging.***
- ***The provided USB cable is not intended for any uses other than charging GEARWRENCH rechargeable tools with USB ports. Charging other types of tools may cause their batteries to overheat and burst, resulting in personal injury, property damage, fire, electric shock or electrocution.***
- ***DO NOT expose charging cable to water, rain or snow.***
- ***Pull by the plugs rather than the cord when disconnecting the charging cable.*** *This will reduce the risk of damage to the plugs and cord.*
- ***Make sure that the cord is located so that it will not be stepped on, tripped over or otherwise subjected to damage or stress.***
- ***DO NOT use a charging cable with a damaged cord or plugs.*** *Have them replaced immediately.*
- ***Foreign materials of a conductive nature, such as, but not limited to, grinding dust, metal chips, steel wool, aluminum foil or any buildup of metallic particles should be kept away from the USB plugs and port.***
- ***Always unplug the charging cable from the power supply when there is no tool attached to it.***

Charging Procedure (Fig. A, B)

WARNING: *Use only the cable supplied by the manufacturer for charging.*

WARNING: *Do not use tool while it is connected to the USB cable.*

1. Pull the USB charging port cover **3** away from the tool.
2. Insert the tool-end USB plug **16** into the USB charging port **4**.

WARNING: *The light source of this luminaire is not replaceable; when the light source reaches its end of life the whole luminaire shall be replaced.*

3. Insert the USB plug **15** into any UL- or CSA-listed USB port (such as on a computer or wall adapter). Charging is complete in 1 to 4 hours depending on power supply rating.
4. The charging LEDs **17** will continuously blink while charging.
5. Charging is complete when all of the charging LEDs **17** remain continuously ON. The battery can be left charging or the USB cable **14** can be disconnected.

Hot/Cold Delay

When the GWFL105 detects that the battery is too hot or too cold, it automatically starts a hot/cold delay, suspending charging until the battery has reached an appropriate temperature. The tool then automatically switches to charging mode. This feature ensures maximum battery life.

1. A cold battery may charge at a slower rate than a warm battery.
2. The hot/cold delay will be indicated by the charging LEDs **17** remaining OFF.
3. Once the battery has reached an appropriate temperature, the charging LEDs **17** will continuously blink, indicating that the tool has resumed the charging procedure.

Important Charging Notes

1. The GWFL105 may become warm to the touch while charging. This is a normal condition, and does not indicate a problem. To facilitate the cooling of the tool after use, avoid placing the tool in a warm environment such as in a metal shed or an uninsulated trailer.
2. You may charge a partially used battery whenever you desire with no adverse effect on the GWFL105.

State of Charge Indicator (Fig. A, C)

The GWFL105 is equipped with a state of charge indicator. This can be used to display the current level of charge in the battery during use and during charging. It does not indicate tool functionality and is subject to variation based on product components, temperature and end-user application.

Checking State of Charge (Fig. C)

- When the LED light is ON, the four charging LEDs **17** will illuminate, indicating the percent of charge in the battery.

SPECIFICATIONS

		GWFL105
Voltage		3.7 V
Battery type		18650 Li-Ion
Lumens		
Articulating head LED	lm	400
Articulating head spotlight LED	lm	50
Spotlight LED	lm	150
Run Time When Fully Charged		
Articulating head LED	hour	3
Articulating head spotlight LED	hour	35
Spotlight LED	hour	10
Charging temperature range		40 °F – 104 °F 4 °C – 40 °C
Operating temperature range		14 °F – 140 °F -10 °C – 60 °C
Storage temperature range		14 °F – 140 °F -10 °C – 60 °C

OPERATION

CAUTION: Do not stare into the LEDs. *Serious eye injury could result.*

Multifunction Button (Fig. A)

The LED lights **7**, **9** have one brightness setting.
The LED lights **6** have two brightness setting.

1. Press the multifunction button **1** once to activate the articulating head LED **6**, white LED ON
2. Press the multifunction button **1** second time to activate the articulating head LED **6**, red LED ON
3. Press the multifunction button **1** a third time to activate the articulating head spotlight LED **7**.
4. Press the multifunction button **1** a fourth time to turn the LEDs OFF.
5. Press the multifunction button **1** two times quickly to activate the spotlight LED **9**.
6. Press the multifunction button **1** again to turn the LEDs OFF.

Articulating Head (Fig. A, D, E)

The articulating head **5** pivots in ten fixed positions from 0°–180° and then swivels and rotates in position from 0°–180°.

1. To move the articulating head **5** pivot the end of the articulating head **5** upwards away from the housing **2**.
2. To adjust the beam of the articulating head spotlight LED **7**, swivel and rotate the articulating head **5** by twisting it into position.

Clamp (Fig. A, F)

CAUTION: *Ensure area between extended clamp and LED light is clear before releasing hook. Keep your fingers out of the area between the clamp and the LED light when it retracts.*

1. To access the clamp **11**, use the clamp indents **12** to pull the clamp from the base of the light housing so that it extends out from the housing **2**.
2. Place the object you want to clamp into the clamp opening **18** and slowly allow the clamp to slide back into the housing **2** until the object is securely held in place.

Magnets (Fig. A)

CAUTION: *When the LED light hangs by the magnet, do not shake the LED light or the object from which it hangs. Do not hang the work LED light overhead or from anything that is not secure. Personal injury or property damage may occur.*

CAUTION: *Only use the magnet for hanging the LED light. The magnet is not intended to support additional weight. Do not attach or hang anything additional to the LED light or risk of breakage may occur.*

The GWFL105 has two built-in magnets: the base magnet **10** located at the base of the housing **2** and the articulating head magnet **8** located on the tip of the articulating head.

1. The magnets **8** and **10** are intended for catching small metal parts such as screws and bolts.
2. The base magnet **10** is also intended to hold the light in place on solid metal surfaces.

Hang Hook (Fig. A, G)

CAUTION: *When the LED light hangs by the hang hook, do not shake the LED light or the object from which it hangs. Do not hang the LED light overhead or from any electrical wires or anything that is not secure. Personal injury or property damage may occur.*

CAUTION: *Only use the hang hook for hanging the LED light. The hang hook is not intended to support additional weight. Do not attach or hang anything additional to the LED light or risk of breakage may occur.*

CAUTION: *Do not use the hang hook to reach with or to support your weight in any situation.*

The built in hang hook **13** can be be attached to anchored hoses, pipes, tubes or cables in the space you are working in.

1. To access the hang hook **13**, rotate the hang hook **13** away from the housing **2** until the hang hook opening **19** is exposed.
2. Place the hose, pipe, tube or cable in your work space into the hang hook.
   NOTE: Ensure the LED light housing is fully secured and will not slide off the anchored hose, pipe, tube or cable before proceeding.
3. To remove the hang hook **13** from the anchored hose, pipe, tube or cable, grasp the hang hook **13** and slide the anchored hose, pipe, tube or cable from the hang hook opening **19**.
4. Secure the hang hook **13** into place onto the housing **2**.

Cleaning

WARNING: *Never use solvents or other harsh chemicals for cleaning the non-metallic parts of the tool. These chemicals may weaken the plastic materials used in these parts. Use a cloth dampened only with water and mild soap. Never let any liquid get inside the tool; never immerse any part of the tool into a liquid.*

Repairs

The worklight is not serviceable. The LED light bulbs and battery cannot be replaced by the user.

GEARWRENCH® is a registered trademark of Apex Brands, Inc., a Division of Apex Tool Group, LLC.
GearWrench® est une marque déposée d'Apex Brands, Inc., une division d'Apex Tool Group, LLC.
GearWrench® es una marca registrada de Apex Brands, Inc., una división de Apex Tool Group, LLC.

For questions, comments, or to get additional warranty information, call toll free: 1-800-688-8949
Appelez au numéro sans frais suivant si vous avez des questions, commentaires ou désirez plus d'information concernant la garantie : 1-800-688-8949
Preguntas, comentarios o para mas información a cerca dela garantía llámenos grátis al 1-800-688-8949

© 2023 Apex Tool Group, LLC